PCB header - DMC 1,5/12-G1F-3,5-LR P20THR

1787111

https://www.phoenixcontact.com/us/products/1787111

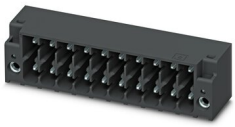

PCB headers, nominal cross section: 1.5 mm^2, color: black, nominal current: 8 A, rated voltage (III/2): 160 V, contact surface: Tin, type of contact: Male connector, number of potentials: 24, number of rows: 2, number of positions: 12, number of connections: 24, product range: DMC 1,5/..-G1F-THR, pitch: 3.5 mm, pin layout: Linear pinning, solder pin [P]: 2 mm, number of solder pins per potential: 1, plug-in system: COMBICON DFMC 1,5, Pin connector pattern alignment: Standard, locking: Snap-in locking, mounting: Lock & release threaded flange, type of packaging: packed in cardboard

Your advantages

- Designed for integration into the SMT soldering process
- Screwable flange for superior mechanical stability
- Automatic locking and intuitive release through Lock and Release operating lever in contrasting color
- Conductor connection on several levels enables higher contact density
- Small component size for applications where space is at a premium

Commercial Data

Item number	1787111
Packing unit	1 pc
Minimum order quantity	50 pc
Sales Key	A01
Product Key	AABTJA
Catalog Page	Page 187 (C-1-2013)
GTIN	4046356596725
Weight per Piece (including packing)	6.618 g
Weight per Piece (excluding packing)	6.56 g
Customs tariff number	85366930
Country of origin	DE

Technical Data

Product properties

Type	Headers
Product line	COMBICON Connectors S
Product type	PCB headers
Number of positions	12
Pitch	3.5 mm
Number of connections	24
Number of rows	2
Mounting flange	Lock & release threaded flange
Number of potentials	24
Pin layout	Linear pinning

Electrical properties

Nominal current I_N	8 A
Nominal voltage U_N	160 V
Pollution degree	3
Contact resistance	2 mΩ
Rated voltage (III/3)	160 V
Rated surge voltage (III/3)	2.5 kV
Rated voltage (III/2)	160 V
Rated surge voltage (III/2)	2.5 kV

Mounting

Mounting type THR soldering	THR soldering
Mounting type	THR soldering

Processing notes

Process	Reflow/wave soldering
Moisture Sensitive Level	MSL 1
Classification temperature T_c	260 °C
Solder cycles in the reflow	3

Flange

Tightening torque	0.2 Nm

Material specifications

Material data - contact

Note	WEEE/RoHS-compliant, free of whiskers according to IEC 60068-2-82/JEDEC JESD 201
Contact material	Cu alloy
Surface characteristics	Tin-plated
Metal surface contact area (top layer)	Tin (3 - 5 µm Sn)

Metal surface contact area (middle layer)	Nickel (1 - 3 µm Ni)
Metal surface soldering area (top layer)	Tin (3 - 5 µm Sn)
Metal surface soldering area (middle layer)	Nickel (1 - 3 µm Ni)

Material data - housing

Housing color	black (9005)
Insulating material	LCP
Insulating material group	IIIa
CTI according to IEC 60112	175
Flammability rating according to UL 94	V0

Dimensions

Dimensional drawing	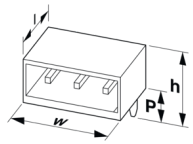
Pitch	3.5 mm
Width [w]	49 mm
Height [h]	12.8 mm
Length [l]	11.6 mm
Installed height	10.8 mm
Solder pin length [P]	2 mm

PCB design

Pin spacing	2.50 mm

Mechanical tests

Test for conductor damage and slackening

Specification	IEC 60999-1:1999-11
Result	Test passed

Repeated connection and disconnection

Specification	IEC 60999-1:1999-11
Result	Test passed

Pull-out test

Specification	IEC 60999-1:1999-11
Conductor cross section/conductor type/tractive force setpoint/actual value	0.2 mm² / solid / > 10 N
	0.2 mm² / flexible / > 10 N
	1.5 mm² / solid / > 40 N
	1.5 mm² / flexible / > 40 N

Insertion and withdrawal forces

Result	Test passed

No. of cycles	25
Insertion strength per pos. approx.	3 N
Withdraw strength per pos. approx.	2 N

Contact holder in insert

Specification	IEC 60512-15-1:2008-05
Contact holder in insert Requirements >20 N	Test passed

Resistance of inscriptions

Specification	IEC 60068-2-70:1995-12
Result	Test passed

Polarization and coding

Specification	IEC 60512-13-5:2006-02
Result	Test passed

Visual inspection

Specification	IEC 60512-1-1:2002-02
Result	Test passed

Dimension check

Specification	IEC 60512-1-2:2002-02
Result	Test passed

Electrical tests

Thermal test | Test group C

Specification	IEC 60512-5-1:2002-02
Tested number of positions	20

Insulation resistance

Specification	IEC 60512-3-1:2002-02
Insulation resistance, neighboring positions	> 5 MΩ

Temperature cycles

Specification	IEC 60999-1:1999-11
Result	Test passed

Air clearances and creepage distances |

Specification	IEC 60664-1:2007-04
Insulating material group	IIIa
Comparative tracking index (IEC 60112)	CTI 175
Rated insulation voltage (III/3)	160 V
Rated surge voltage (III/3)	2.5 kV
minimum clearance value - non-homogenous field (III/3)	1.5 mm
minimum creepage distance (III/3)	2.5 mm
Rated insulation voltage (III/2)	160 V

Rated surge voltage (III/2)	2.5 kV
minimum clearance value - non-homogenous field (III/2)	1.5 mm
minimum creepage distance (III/2)	1.6 mm
Rated insulation voltage (II/2)	250 V
Rated surge voltage (II/2)	2.5 kV
minimum clearance value - non-homogenous field (II/2)	1.5 mm
minimum creepage distance (II/2)	2.5 mm

Environmental and real-life conditions

Vibration test

Specification	IEC 60068-2-6:2007-12
Frequency	10 - 150 - 10 Hz
Sweep speed	1 octave/min
Amplitude	0.35 mm (10 - 60.1 Hz)
Sweep speed	50 m/s² (60.1 - 150 Hz)
Test duration per axis	2.5 h

Durability test

Specification	IEC 60512-9-1:2010-03
Impulse withstand voltage at sea level	2.95 kV
Contact resistance R_1	2 mΩ
Contact resistance R_2	2.3 mΩ
Insertion/withdrawal cycles	25
Insulation resistance, neighboring positions	> 5 MΩ

Climatic test

Specification	ISO 6988:1985-02
Corrosive stress	0.2 dm^3 SO_2 on 300 dm^3/40 °C/1 cycle
Thermal stress	105 °C/168 h
Power-frequency withstand voltage	1.39 kV

Ambient conditions

Ambient temperature (operation)	-40 °C ... 100 °C (dependent on the derating curve)
Ambient temperature (storage/transport)	-40 °C ... 70 °C
Relative humidity (storage/transport)	30 % ... 70 %
Ambient temperature (assembly)	-5 °C ... 100 °C

Packaging specifications

Type of packaging	packed in cardboard

Drawings

Diagram

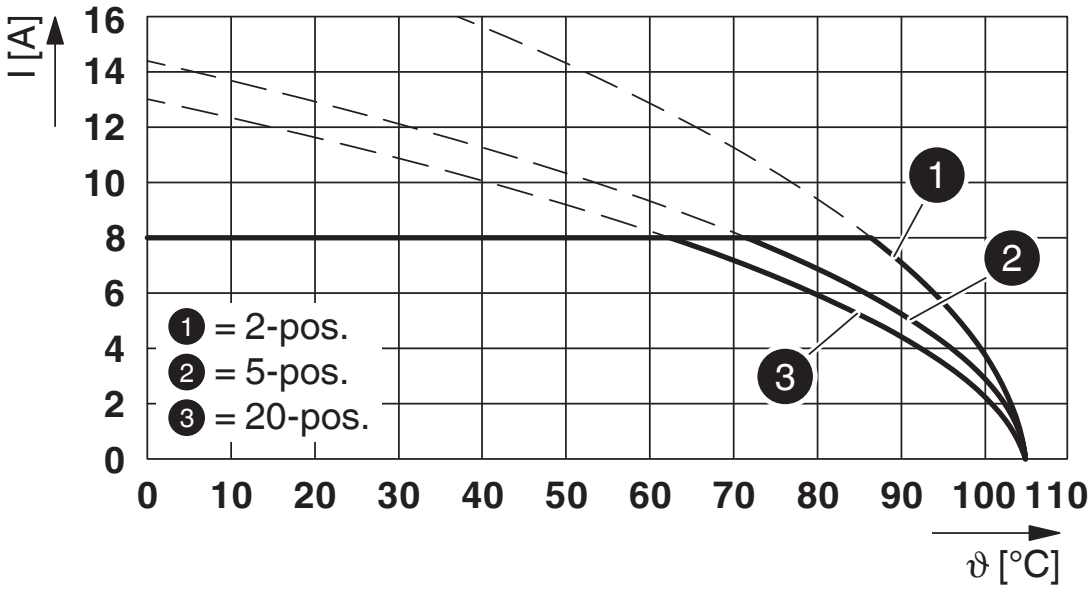

Type: DFMC 1,5/...-ST-3,5-LR with DMC 1,5/...-G1F-3,5-LR P...THR

Dimensional drawing

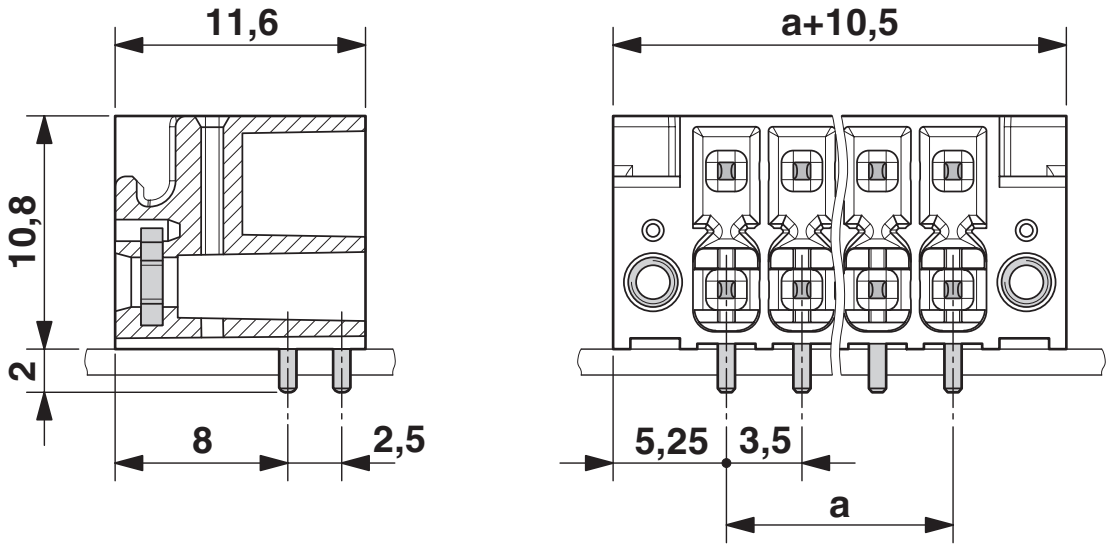

Diagram

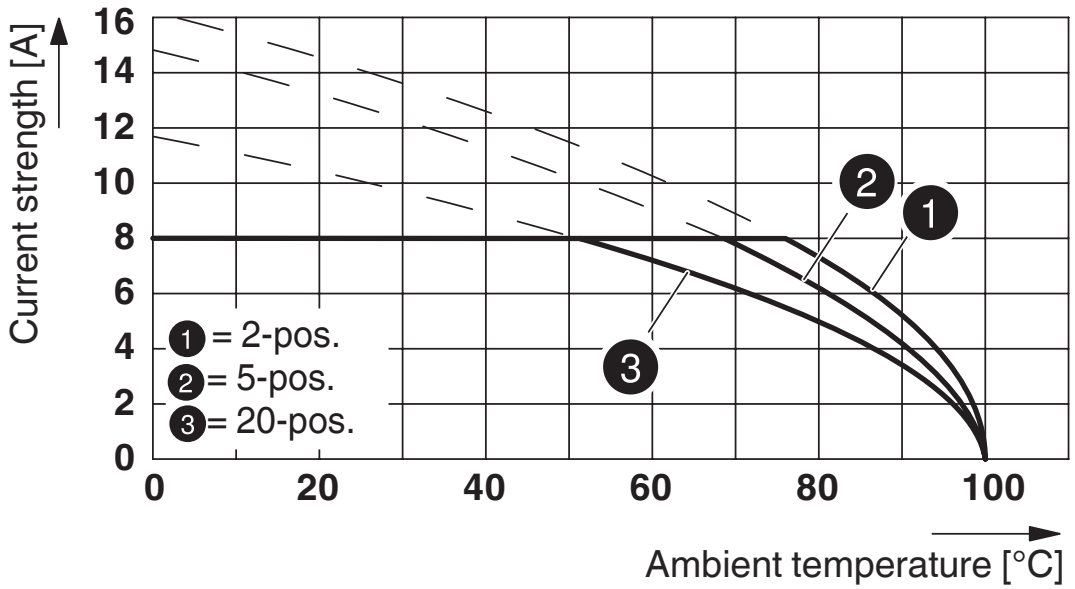

Type: DFMC 1,5/...-STF-3,5 with DMC 1,5/...-G1F-3,5-LR P...THR

Schematic diagram

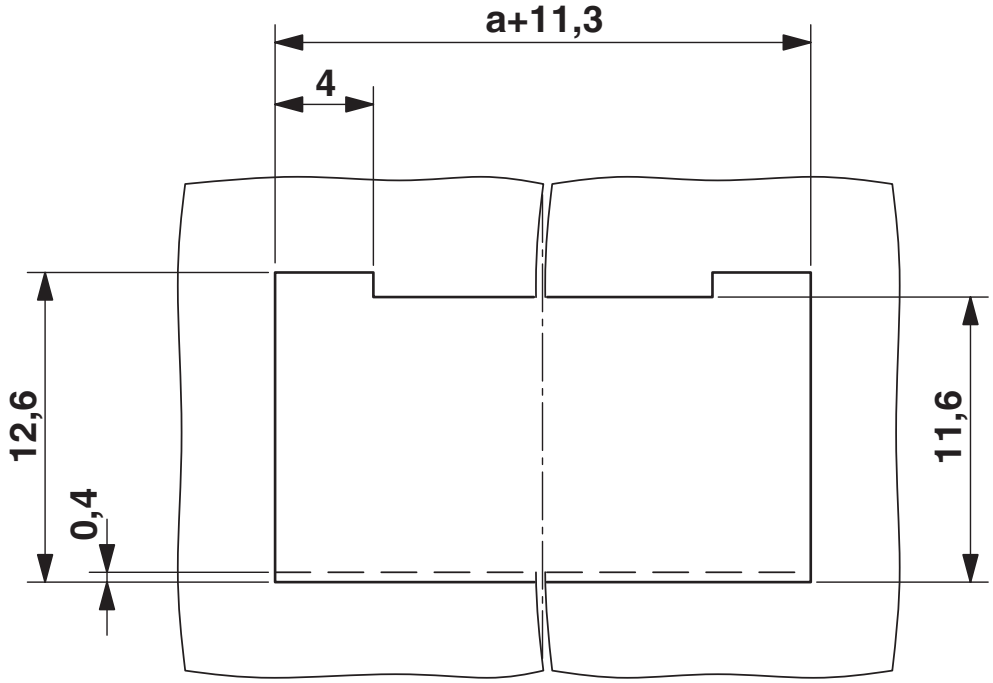

Panel cutout

Drilling plan/solder pad geometry

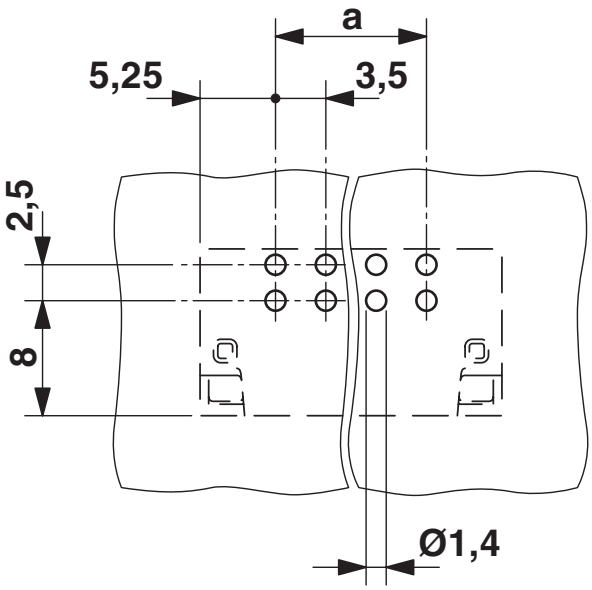

Schematic diagram

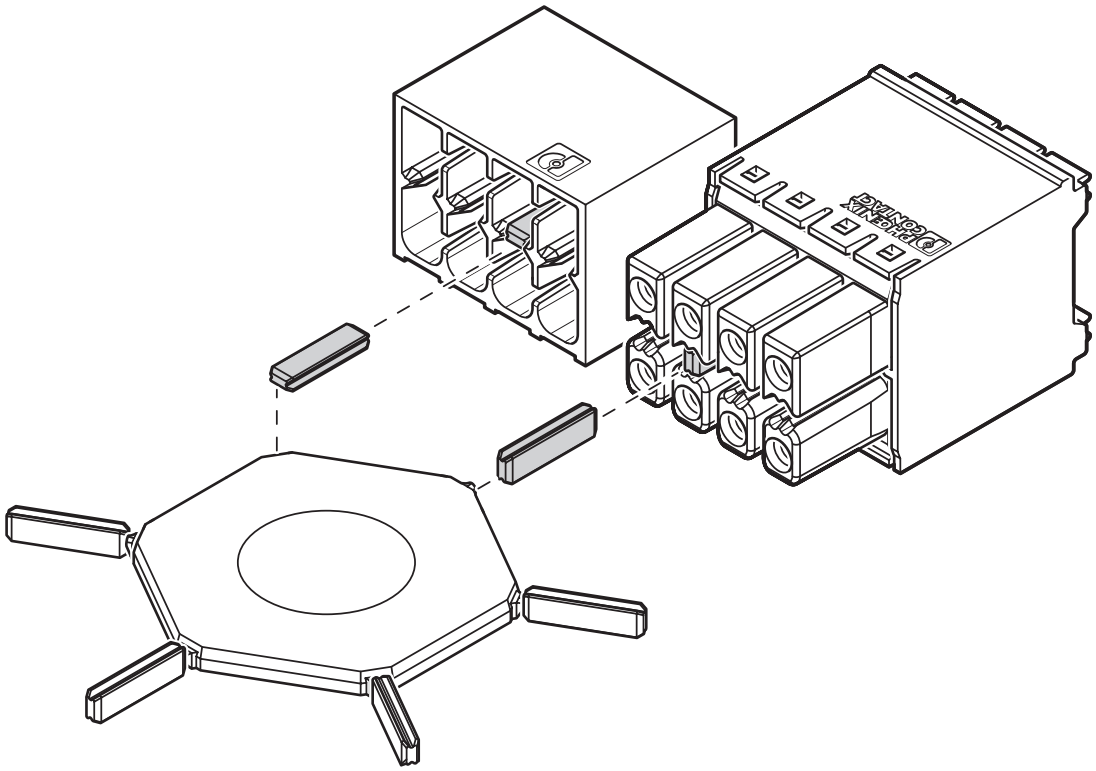

Use of the CP-DMC... coding profile

Approvals

IECEE CB Scheme
Approval ID: DE1-60359_B1_B2

	Nominal Voltage U_N	Nominal Current I_N	Cross Section AWG	Cross Section mm^2
	160 V	8 A	-	-

EAC
Approval ID: B.01687

cULus Recognized
Approval ID: E60425-20110128

	Nominal Voltage U_N	Nominal Current I_N	Cross Section AWG	Cross Section mm^2
Use group B				
	150 V	8 A	-	-
Use group C				
	50 V	8 A	-	-
Use group D				
	300 V	8 A	-	-

VDE report with production monitoring
Approval ID: 40038423

	Nominal Voltage U_N	Nominal Current I_N	Cross Section AWG	Cross Section mm^2
	160 V	8 A	-	-

Classifications

ECLASS

ECLASS-9.0	27440402
ECLASS-10.0.1	27440402
ECLASS-11.0	27460201

ETIM

ETIM 8.0	EC002637

UNSPSC

UNSPSC 21.0	39121400

Environmental Product Compliance

China RoHS	Environmentally friendly use period: unlimited = EFUP-e
	No hazardous substances above threshold values

Accessories

Coding profile

Coding profile - CP-DMC 1,5 NAT - 1790647

https://www.phoenixcontact.com/us/products/1790647

Coding profile, for insertion between the coding ribs of the connector and the header following the reflow soldering process, insulating material, color: natural

PCB connector

PCB connector - DFMC 1,5/12-STF-3,5 - 1790399

https://www.phoenixcontact.com/us/products/1790399

Plug, nominal current: 8 A, rated voltage (III/2): 160 V, number of positions: 12 with 24 contacts, pitch: 3.5 mm, connection method: spring-cage connection, color: green, contact surface: tin

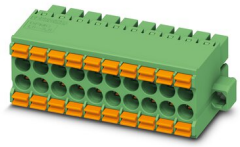

PCB connector

PCB connector - DFMC 1,5/ 2-STF-3,5 - 1790292

https://www.phoenixcontact.com/us/products/1790292

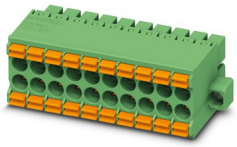

Plug, nominal current: 8 A, rated voltage (III/2): 160 V, number of positions: 2 with 4 contacts, pitch: 3.5 mm, connection method: spring-cage connection, color: green, contact surface: tin

PCB connector

PCB connector - DFMC 1,5/12-ST-3,5-LR - 1790580

https://www.phoenixcontact.com/us/products/1790580

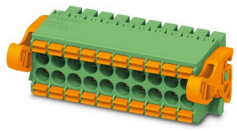

Plug, nominal current: 8 A, rated voltage (III/2): 160 V, number of positions: 12 with 24 contacts, pitch: 3.5 mm, connection method: spring-cage connection, color: green, contact surface: tin

PCB header - DMC 1,5/12-G1F-3,5-LR P20THR

1787111

https://www.phoenixcontact.com/us/products/1787111

PCB connector

PCB connector - DFMC 1,5/ 2-ST-3,5-LR - 1790483

https://www.phoenixcontact.com/us/products/1790483

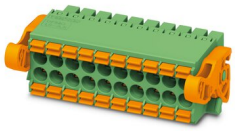

PCB connector, nominal cross section: 1.5 mm^2, color: green, nominal current: 8 A, rated voltage (III/2): 160 V, contact surface: Tin, type of contact: Female connector, number of potentials: 4, number of rows: 2, number of positions: 2, number of connections: 4, product range: DFMC 1,5/..-ST-LR, pitch: 3.5 mm, connection method: Push-in spring connection, conductor/PCB connection direction: 0 °, number of solder pins per potential: 1, plug-in system: COMBICON DFMC 1,5, locking: Snap-in locking, mounting: Lock & Release ejector lever, type of packaging: packed in cardboard

Phoenix Contact USA
586 Fulling Mill Road
Middletown, PA 17057, United States
(+717) 944-1300
info@phoenixcon.com